Thank you for choosing a NIVELCO instrument.
We are sure that you will be satisfied throughout its use!

1. APPLICATION

The **NIVOSONAR GPA PARSHALL** flumes enable flow measurements on gravitational sewers, brook channels, irrigation channels or other open channels. The measuring flume is easy to install in new or existing channel structures. Depending on the flow rate 9 different sized – measurement range – channels are available to the users.
The flume size should be chosen in accordance that the flow changing should result the highest possible level change, but the flow rate reduction caused by the resistance of the flume should not result sedimentation.

2. TECHNICAL DATA

GPA-1		P1	P2	P3	P4	P5	P6	P7	P8	P9
Q_{min}	m^3/h	0.936	1.72	2.808	5.472	8.1	10.476	15.84	20.88	31.32
Q_{max}	m^3/h	22.392	54.36	196.56	604	1324.8	2152.8	3232.8	4359.6	6627
W	cm	2.54	5.08	7.62	15.24	22.86	30.48	45.70	61.00	91.40
B	cm	30.0	34.0	39.0	53.0	75.0	120.0	130.0	135.0	150.0
C	cm	9.29	13.49	17.80	39.40	38.1	61.0	76.2	91.44	121.9
D	cm	16.75	21.35	25.88	39.69	57.47	84.46	102.6	120.7	157.2
E	cm	23	26.4	46.7	62.0	80	92.5	92.5	92.5	92.5
L	cm	63.5	77.5	91.5	152.4	162.6	286.7	294.3	301.9	316.9
O	cm	5	5	5	10	10	10	10	10	10
U	cm	24.8	28.6	49.2	69.6	87.6	100.1	100.1	100.1	100.1
V	cm	30.7	35.35	39.9	54	80	100	120	140	180
m	kg	9	10.6	19.1	49.0	81.0	146	183	231	252
hd/ha		0.6	0.6	0.6	0.6	0.6	0.7	0.7	0.7	0.7
a		0.0609	0.1197	0.1784	0.354	0.521	0.675	1.015	1.368	2.081
b		1.552	1.553	1.555	1.558	1.558	1.556	1.560	1.564	1.569

Table 1

3. ACCESSORIES

- User's manual, Warranty Card, Declaration of Conformity

4. MECHANICAL DESIGN

The **PARSHALL** flume is a rigid structure, manufactured out of polypropylene with narrow tolerances to ensure high accuracy of metering, therefore during transport and installation great care should be taken to prevent the flume of getting deformed.

5. OPERATION

When the **PARSHALL** flume is applied as a reducing element, the stagnation pressure causes the liquid level to increase. This change in level is proportional to the velocity of the liquid and the flow rate.
The change of the fluid level is measurable with **NIVELCO's EasyTREK** or **EchoTREK** ultrasonic level transmitters. The sensor should be placed directly above the flume.

NIVELCO

NIVOSONAR

PARSHALL FLUME

User's manual

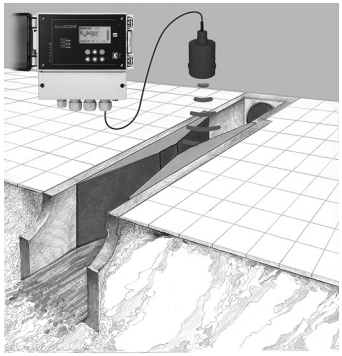

Manufacturer:
NIVELCO Process Control Co.
H-1043 Budapest, Dugonics u. 11.
Phone: (36-1) 889-0100 ■ Fax: (36-1) 889-0200
E-mail: sales@nivelco.com ■ www.nivelco.com

6. INSTALLATION

The **PARSHALL** flume should be installed into the longitudinal axis of the channel so in the inlet and outlet the hydraulic conditions should comply with the general regulations.

Flow direction and ultrasonic sensor position are indicated on the flume. Stability of flow and flow-rate profile should be ensured; vortexing or waving motion is not allowed.

A flow homogenisation section – basically a straight section without any disturbing object/effect – of 2-3 times the flume width should be ensured before the flume inlet. The same should be provided at the flume outlet with a length of 3-4 times the flume width, but at least 5 m straight section. In these homogenisation sections the cross-section of the channel should be regular and symmetrical to the longitudinal axis. The side walls and the bottom of the channel to be measured should be connected to the corresponding sides of the Parshall flume. The angle between the connecting plates and the axis of the Parshall flume should not be larger than 45°. The tilt angle of the bottom connecting plates should not be larger than 15° (see Figure 1).

In case of a narrow channels the biggest angle of the side walls connected to the Parshall flume is 10°. The flow can be stabilized posteriorly with the side walls or floats.

At the flume outlet, it is necessary to ensure that the "flooding" should not exceed the permissible extent (h_d/h_a ratio, see Table 1). If liquid level exceeds permissible height, flume location or the size of the homogenising sections at flume outlet need to be modified.

The flume accuracy depends significantly on the installation so it is recommended to entrust a specialist to perform the installation. It is recommended to lay the PARSHALL flume into concrete. First the flume bottom has to be embedded in concrete, but ensuring the horizontal position of the top cover of the flume. Then the shutters of the sections joining the channel side walls to the flume should be done in accordance with the principles already described.

Prior to laying the concrete, the flume walls should be strut from inside to prevent structural deformation. It is recommended to install 1.5 cm x 1.5 cm spacer along the border – upper edge, front and back side – of the flume during the laying of concrete. After the embedding the spacers should be removed and the gaps should be filled with flexible sealing such as silicone rubber. If the channel stiffening ribs obstruct the level measurement, it can be cut off after mounting!

7. MAINTENANCE

The PARSHALL flume is suitable for outdoor placement and resists well to acids or solvents under normal conditions. The flume needs to be checked regularly and cleaned whenever necessary. Sedimentation or other contamination will impair the measurement accuracy!

Warning! The water in the measuring flume should not get frozen since this may cause cracks or a distorted shape.

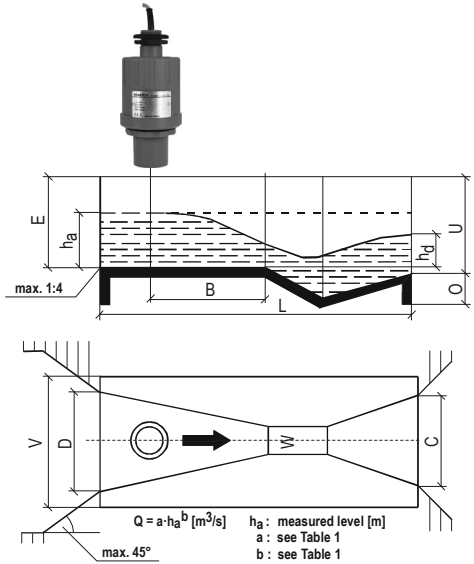

Figure 1

8. STORAGE

Storage temperature: -25°C ...+60°C

The flumes should not pile one upon the other during storage or transportation!

9. WARRANTY

We provide a warranty for the period of 3 (three) years. Warranty claims are observed on the simultaneous presentation of the Warranty Card and the purchase invoice only. All repairs under guarantee are performed on the Manufacturer's premises; the costs of dismantling, reinstalling or transport are borne by the Customer. The manufacturer only accepts the device in carefully cleaned, and disinfected condition. Claims for guarantee are not valid in respect of failures due to abnormal usage, breakage, disaster, incompetent installation or usage.

gpa1p10a0600h_03
September 2015.
NIVELCO reserves the right to change technical specifications without notice.